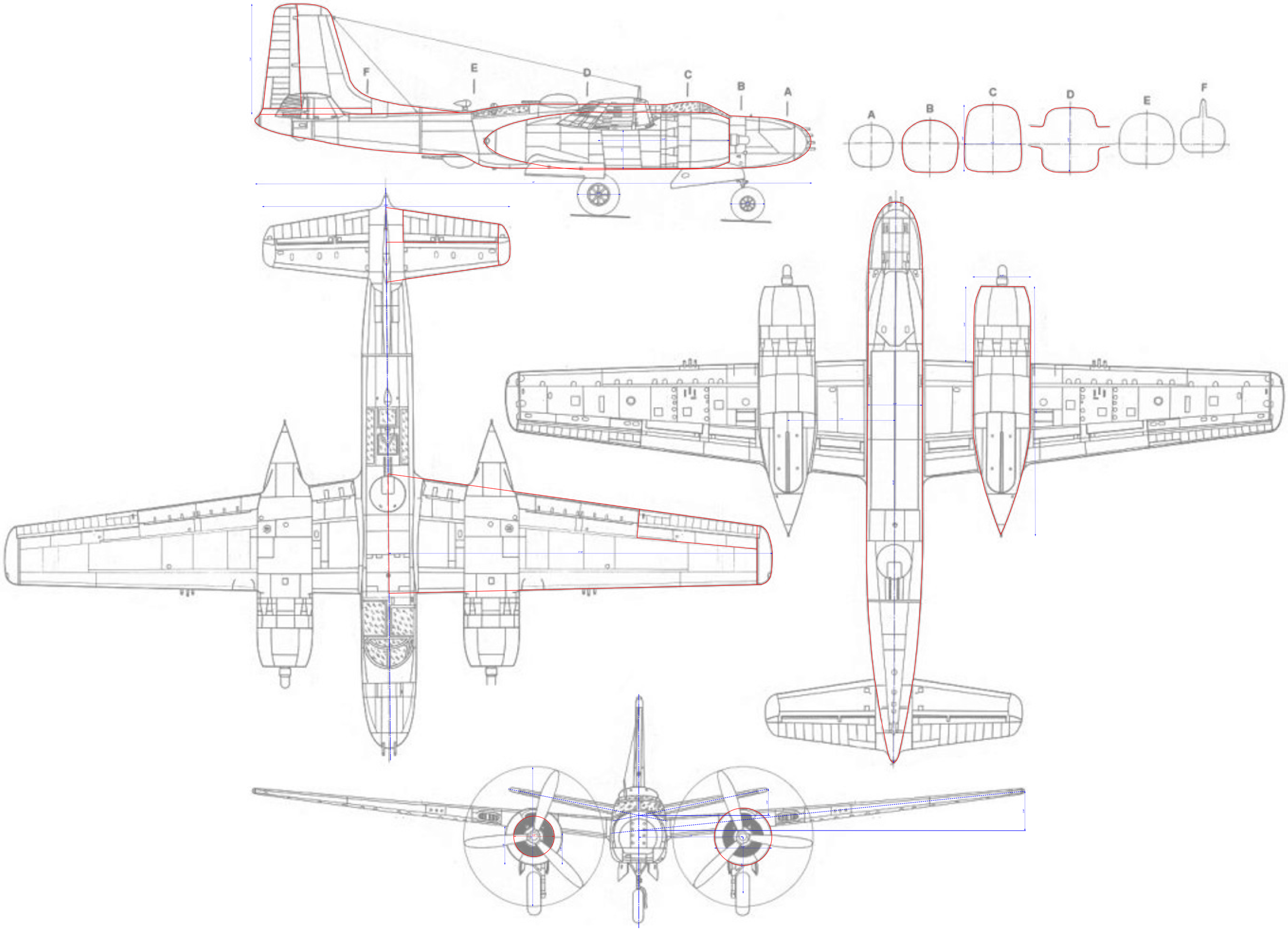
F
E
D
C
B
A
A
B
C
D
E
F

1/15th Semi-Scale A-26 Intruder Fuselage Plan

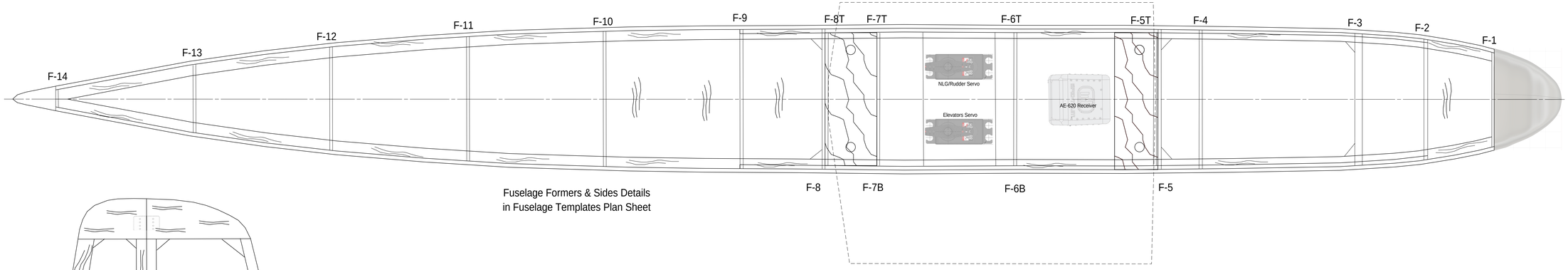

Fuselage Formers & Sides Details
in Fuselage Templates Plan Sheet

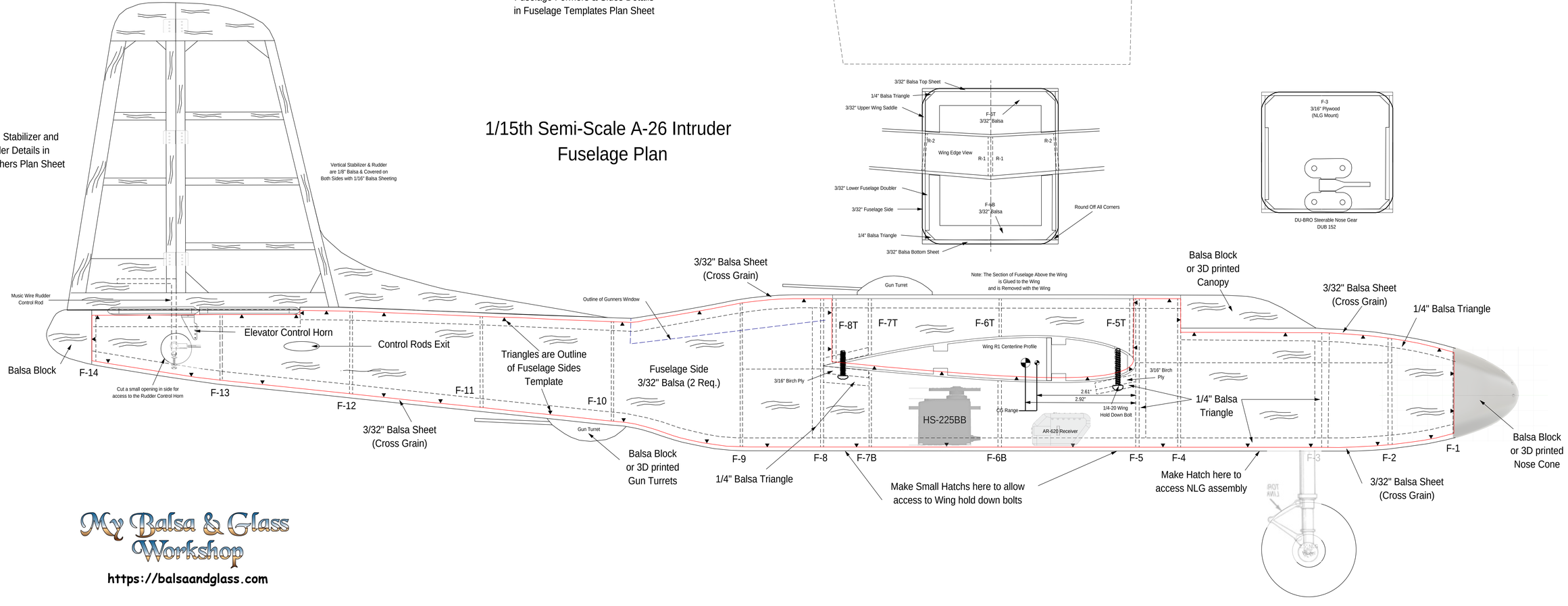

My Balsa & Glass Workshop
https://balsaandglass.com

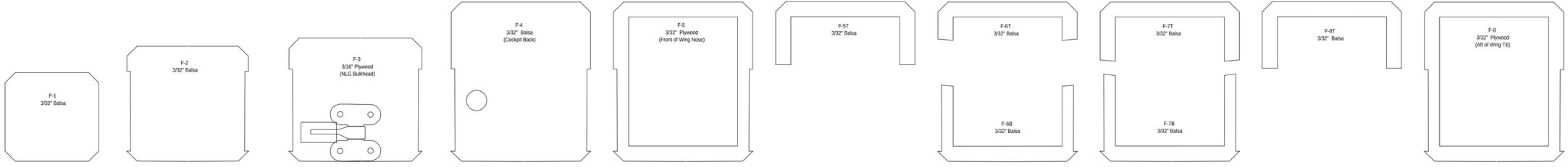

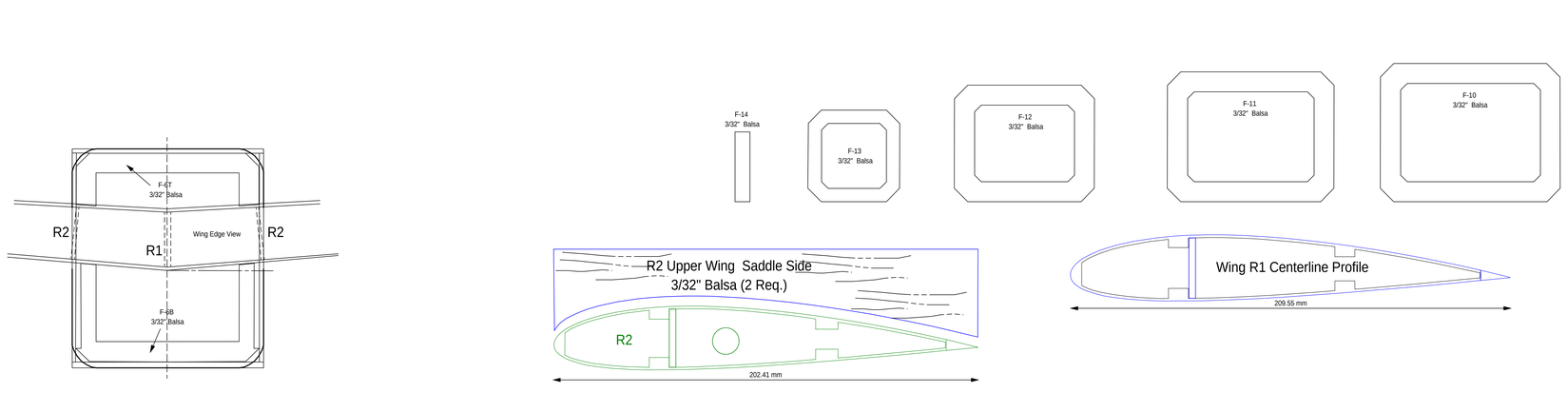

1/15th Semi-Scale A-26 Invader Fuselage Templates Plan

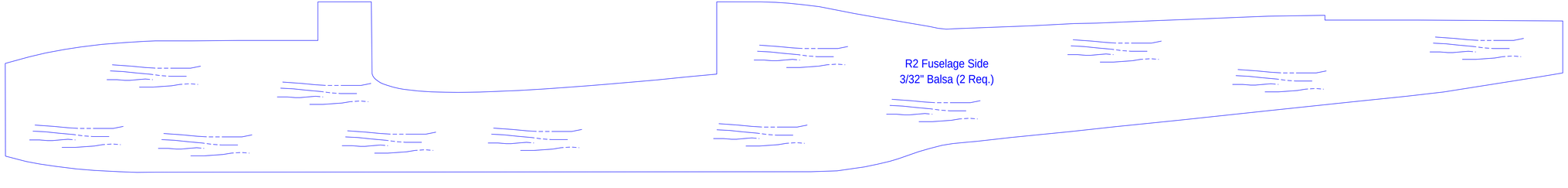

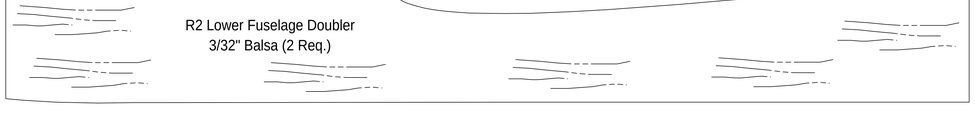

My Balsa & Glass Workshop

https://balsaandglass.com

My Balsa & Glass Workshop

https://balsaandglass.com

1/15th Semi-Scale A-26 Invader Wing Plan

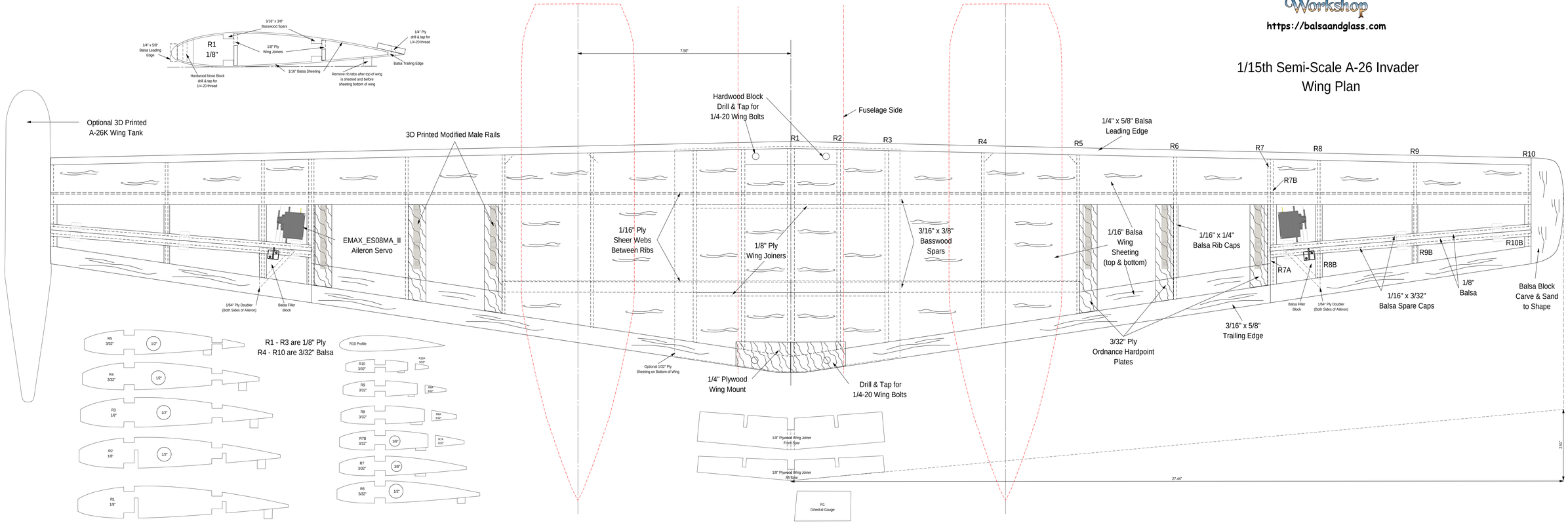

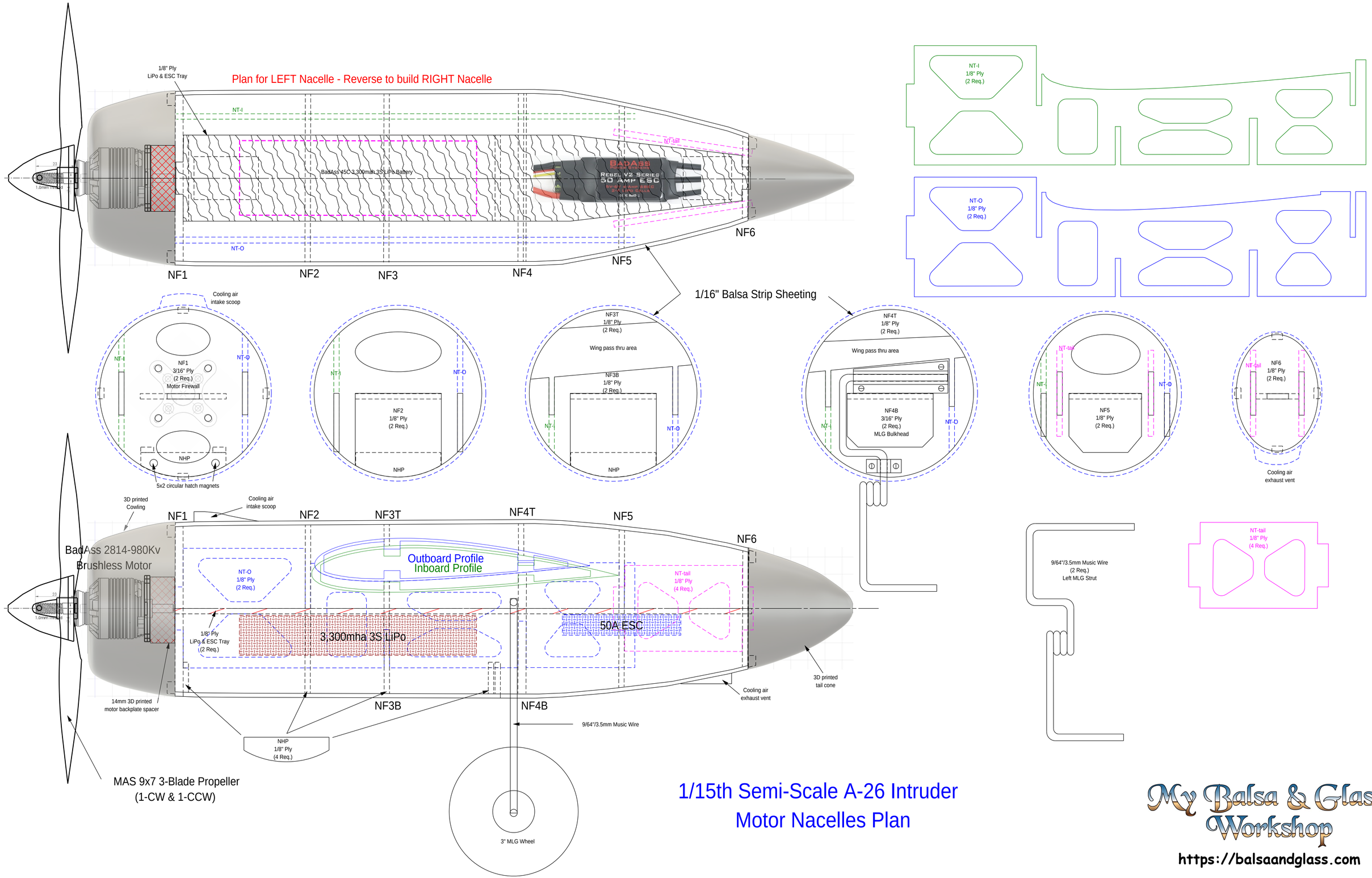

1/15th Semi-Scale A-26 Intruder Motor Nacelles Plan

My Balsa & Glass Workshop

https://balsaandglass.com

1/15th Semi-Scale A-26 Invader
Horizontal Stabilizer/Elevator
&
Vertical Stabilizer/Rudder
(Tail Feathers Plan)

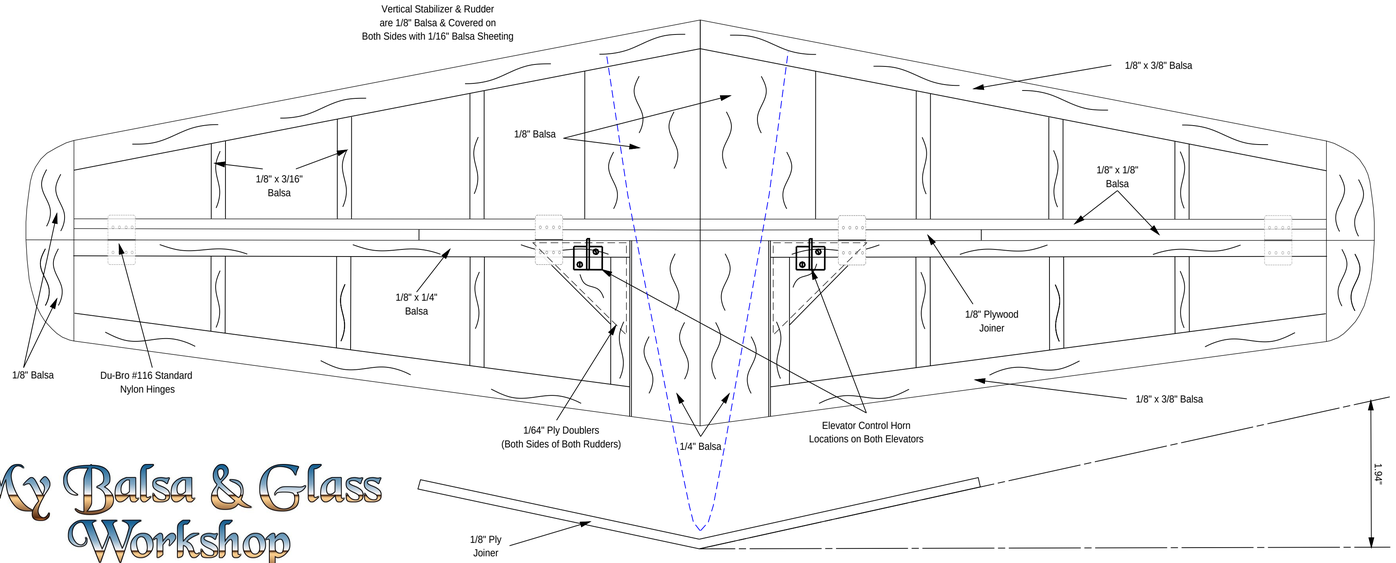

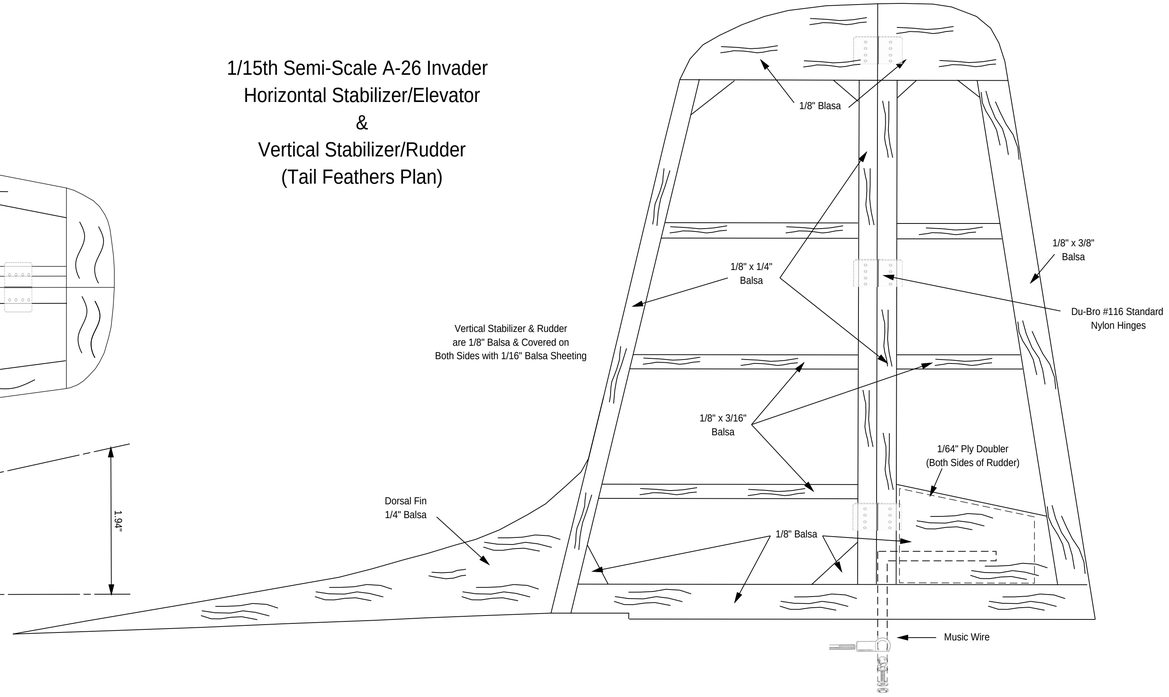

My Balsa & Glass Workshop

https://balsaandglass.com